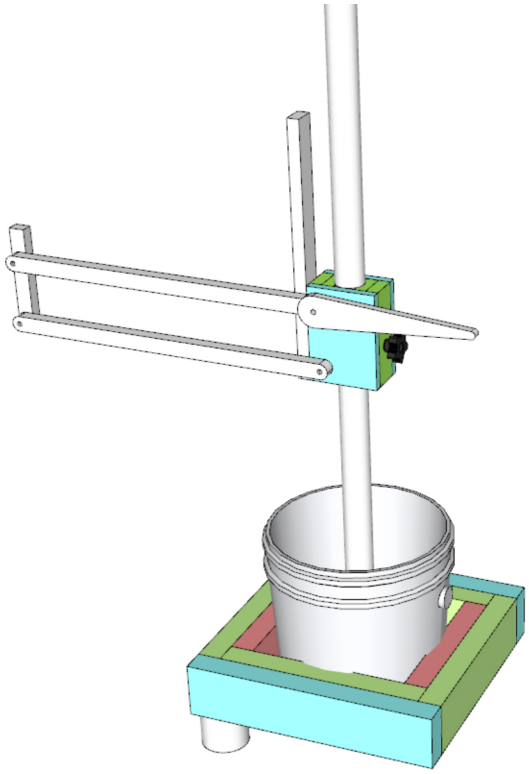

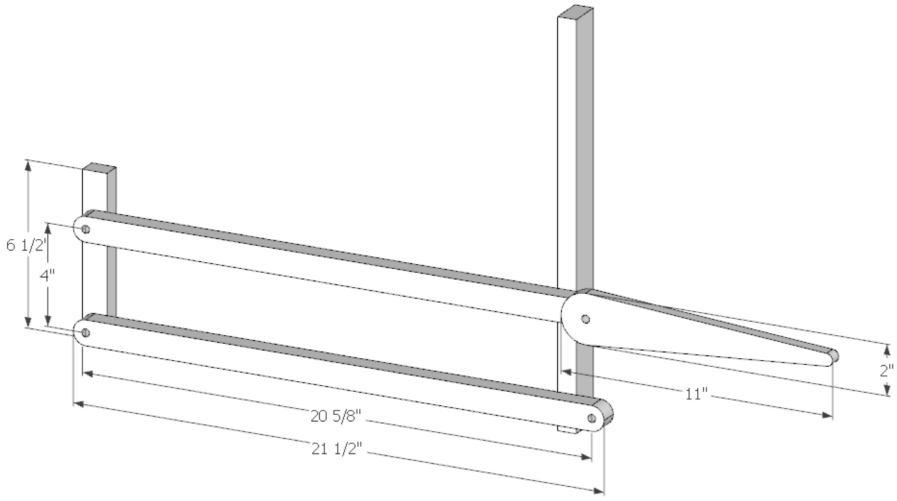
6 1/2"
4"
20 5/8"
21 1/2"
11"
2"

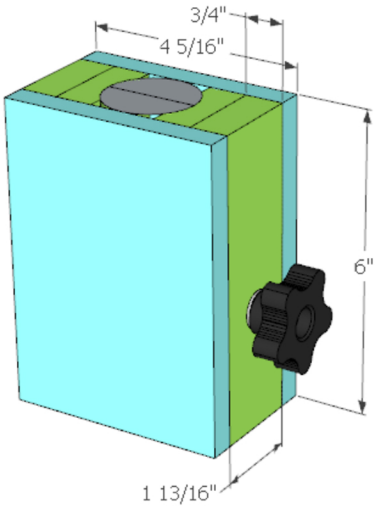
3/4"
4 5/16"
6"
1 13/16"

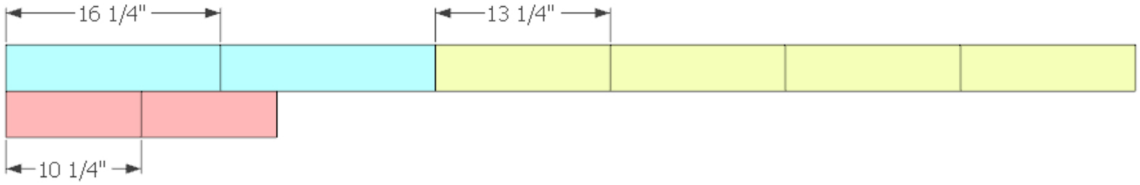
16 1/4"
13 1/4"
10 1/4"